PRODUCED BY AN AUTODESK EDUCATIONAL PRODUCT

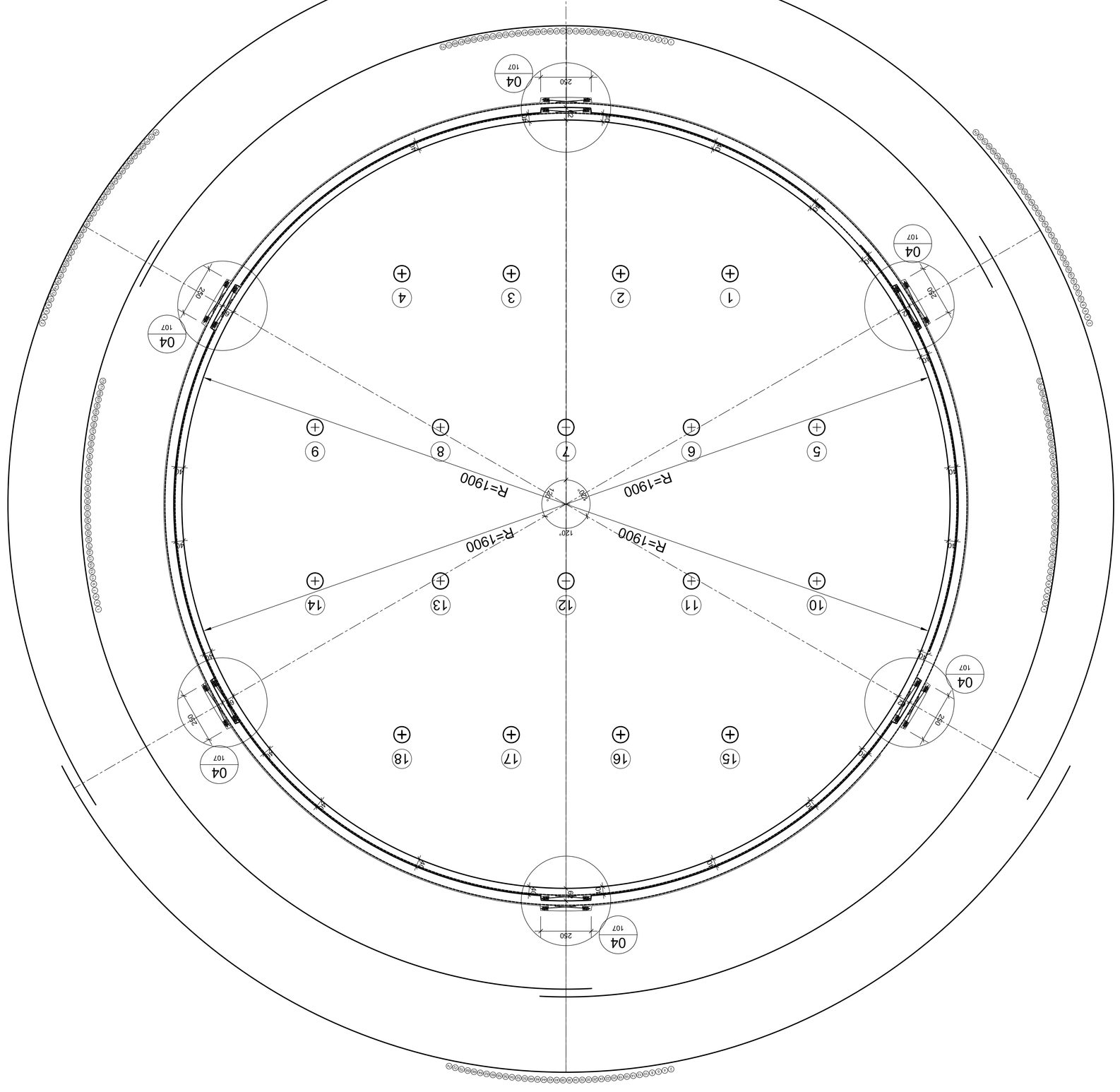

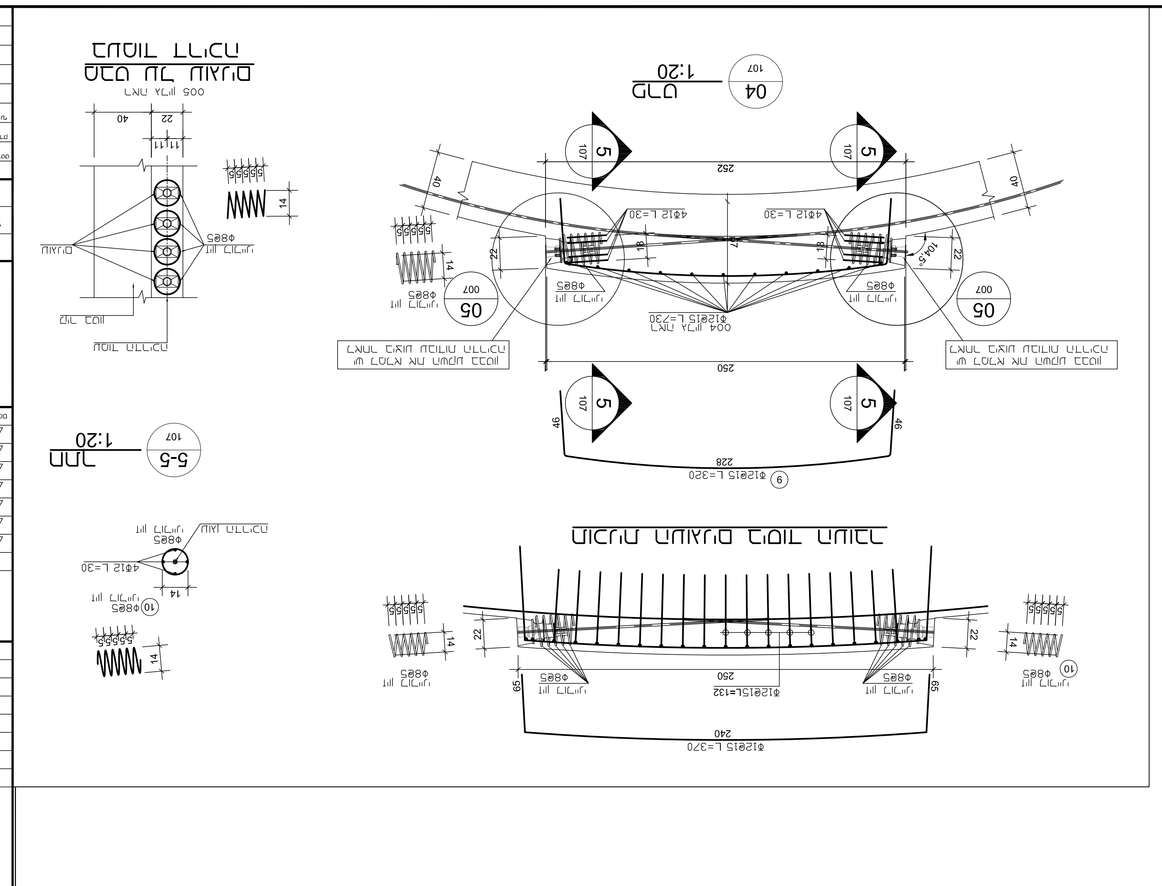
5-5
1:20
107
L=320
228
250
L=370
240
L=192
250
L=30
L=30
L=30